CCD 8015 SERIES

SIZE:	80×80×15 mm
BEARING TYPE:	BALL , SLEEVE & ONE BALL & ONE SLEEVE BEARING
IMPELLER:	PLASTIC WITH FIBER GLASS FILLED UL 94V-0
FRAME:	PLASTIC WITH FIBER GLASS FILLED UL 94V-0
WEIGHT:	26(g)

DIMENSIONS

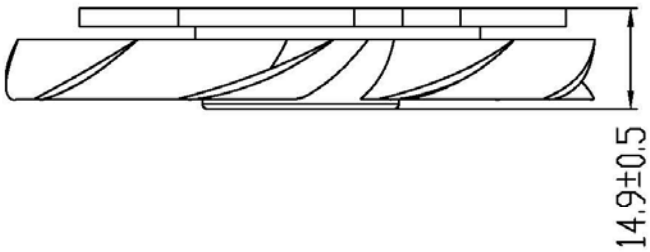

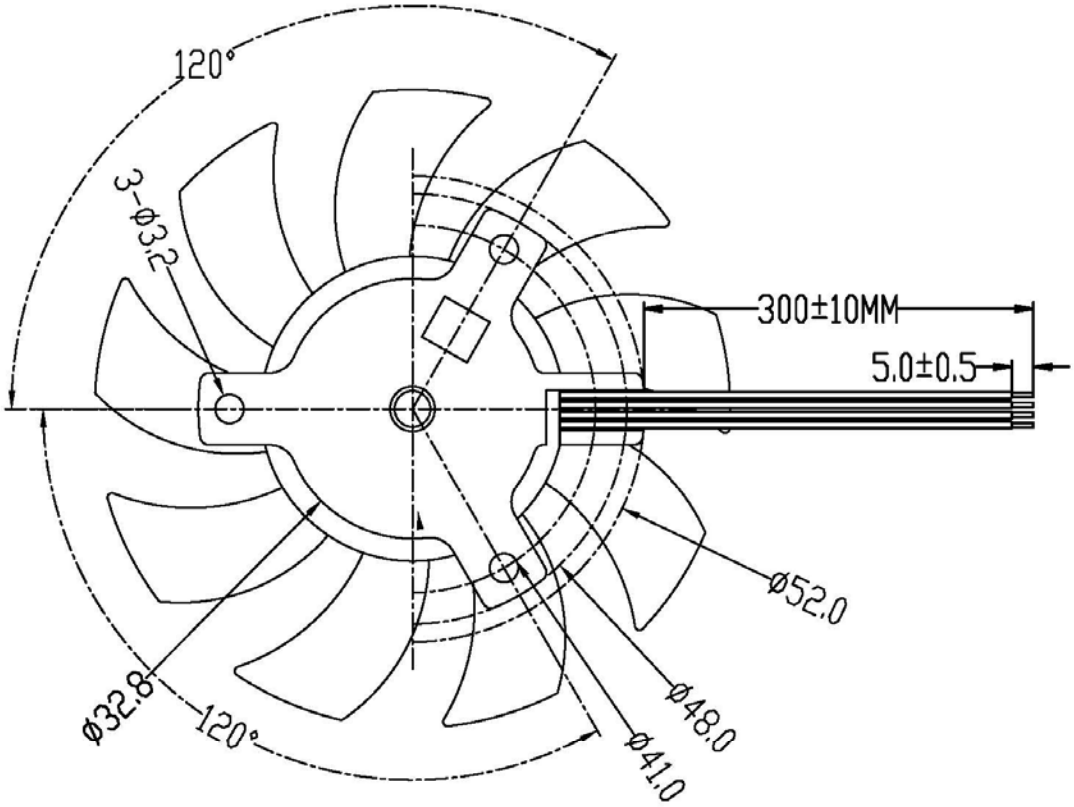

Model No.	Bearing	Rated Voltage (VDC)	Air Flow (CFM)	Rated Current (A)	Input Power (Watts)	Speed (RPM)	Noise Level (dBA)	Wire Revealed
CCD 8015S12H	Sleeve	12	30.16	0.21	2.50	3000	34.57	80*80*15
CCD 8015B12H	2Ball	12	30.16	0.21	2.50	3000	34.57	
CCD 8015C12H	1B1S	12	30.16	0.21	2.50	3000	34.57	